# baton®

## Security Products since 1973

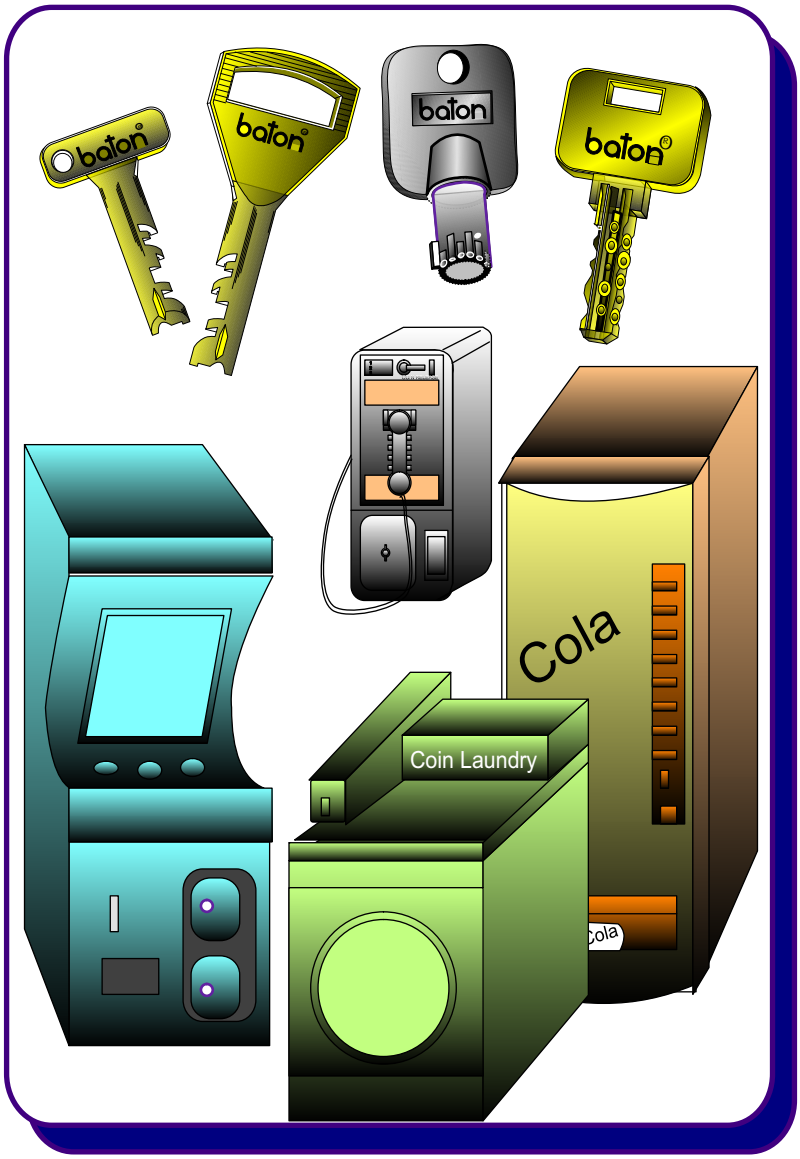


# Catalogue 2013.4 VP

(Payphone & Vending Edition)

***The Widest Range Of Choice In Security For The Vending and Payphone Industries !***

***1 key fits all !***
***4 systems to choice !***

**Baton Security Products**
11521 Salinaz Drive,
Garden Grove,
CA 92843 USA
Tel : (714) 590 6969
Fax: (714) 590 6960

**Toll Free : 1-877-BATON99 (228 6699)**

Distributor & OEM accounts - please call for our special program !

***www.batonlockusa.com***

baton®
Security Products

Dear Coin-Op Payphone & Vending Machine Provider:

It is our pleasure to present you with the latest Product/Price List for the payphone locks for your reference.

Baton has accumulated experience in the manufacturing and distribution of the security locking devices and related hardware since 1973. Since then, we have consistently provided clients with a wide range of high quality locking devices along with edge necessary in today's security industry.

At Baton, our goal is to provide you with the highest quality not only in security products but also in customer service. To assist you with your security needs, our Customer Services Department is open from 8:00 AM until 4:30 PM Pacific Time, Monday through Friday.

The following pages shown the three systems of maximum security Coin-op payphone and Vending locks to meet your total security needs for your operation. Most custom made orders will be completed by our in-house assembly team within 3-5 working days. Under circumstance, we will expedite the delivery to accommodate your need, and meet your particular requirement.

Your complete satisfaction is our goal. Please call our Customer Service Representatives at 1-877-baton99 (228 6699) and let us know how we can serve you. Should you have any other security needs concerning locking devices, please call our CSR as well at the following numbers:

| Toll free Tel : 1-877 - 228 6699<br>Fax: 1-866 - 228 6699 | Toll free Tel : 1-800 - 395 8880<br>Fax: 1-888 - 395 8880 |
|---|---|
| 1. Mortise Door Lock, Low Profile Deadbolts, Tubular Latches and components<br>2. European Profile Cylinders, Rim Cylinders, Key in knob and Mortise Cylinders<br>3. Decorative Hardware<br>4. Special locks for Payphone, Casino, Gaming and Vending Industries. | 1. High security locks and devices of all kinds for Vending, Laundry, Casino and Video Gaming Industries<br>2. Padlocks - Brass, Laminated steel, Hardened steel and Stainless steel for Coin-Op Industries and general public<br>3. 'T' Handle, Hasp, Game Bar etc. for Vending/Video Game Industries<br>4. Do-it-yourselves general hardware |

Sincerely,

Peace Hsu
President

baton®
Security Products

# Sales Policy

## Terms -

All prices are based on FOB Garden Grove, California. Net 10 days can be arranged upon approval on open account; others will be C.O.D. or prepaid. Any past due account is subjected to a finance charge at 1.5% on unpaid balance billed monthly. No further shipment will be honored until account is brought current. Service charges will apply to all returned checks.

## Receipt & Return Goods Policy -

All orders are shipped through United Parcel Service (Ground) or best route of our choice. Special arrangement is available upon your request with additional charge. To protect your interest, it is suggested that a damage report be filed with the carrier upon receipt of damaged or open shipment.

Any discrepancy regarding the shipment must be claimed within five days after merchandise received. Any return item should be received within 30 days of invoice date. A 'RGA' number must be obtained from our CSR prior to returning merchandise.

There will be a 25% restocking charge on merchandise returned or refused for reasons other than defects or incorrect shipments. The restocking charge may vary on the in-house assembled products. No special order item can be returned, other than factory defect.

## Baton's Warranty -

Baton warrants, to the original purchaser, all 'Baton' locks are free of manufacturing defects (excluding oxidation or discoloration) for a period of one year from the date of purchase. Baton is not liable for any incidental or consequential loss or damage.

## Validity & Special Note -

This Products/Price List is good for 6 months from the date issued and supersedes all previous catalogues and price lists. Baton is not responsible for any typographical errors or errors of omission.

baton®
Security Products

# Series 4000 High Security Double-sidebar Camlock, Plug and Screw Locks - 1

## Cam and Plug Locks -




4086
4087
4089

4044

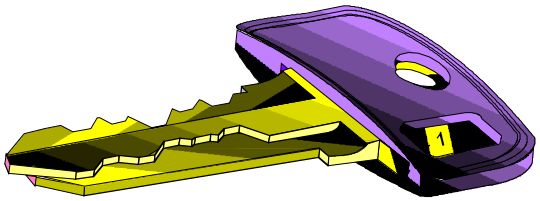


Baton series 4000 Double Sidebar Camlocks and Plug locks are made of machined brass or steel and protected with hardened steel inserts to prevent lock drilling. The patented cylinder constructs a 10 alloy steel detained blocks that are integrated with 2 stainless steel locking sidebars, presents excellent protection against picking/bumping attempts. Hundreds of millions of different key combinations are available. The user-friendly key is a combination of conventional cuts and laser cuts that provides extra protection against unauthorized key duplication. Locks can be ordered to keyed alike (KA), keyed differently (KD) or master keying (MK). All codes are restricted nd registered for customer's exclusive use. Continuous services can be obtained from Baton's authorized services centers or factory dircet.

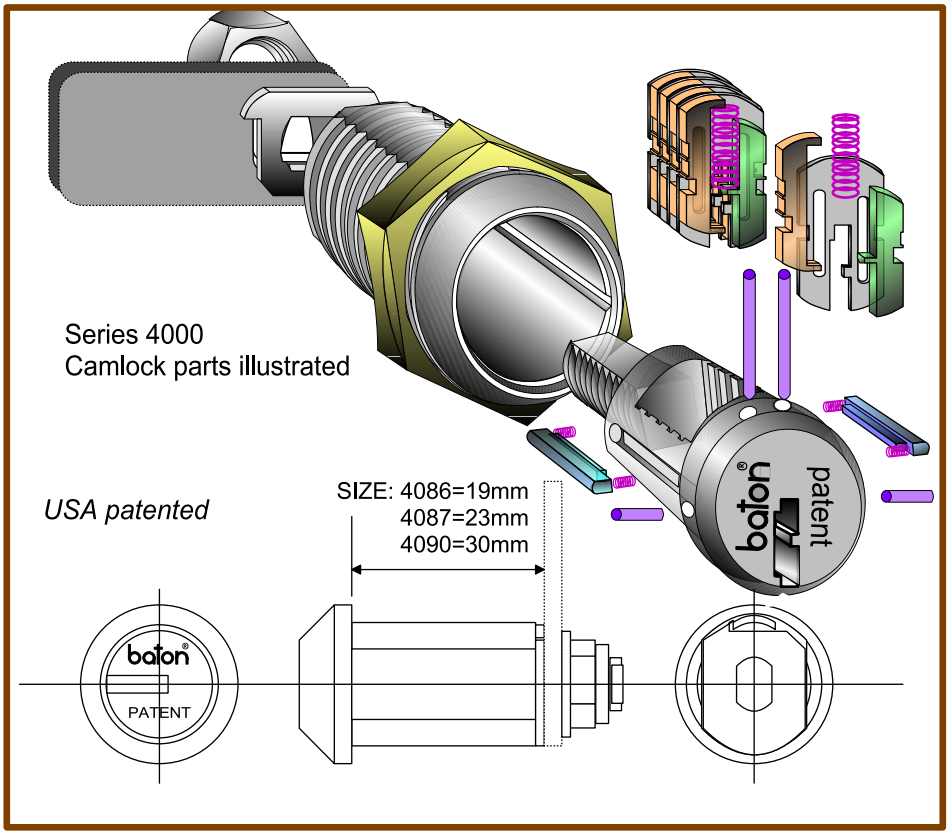


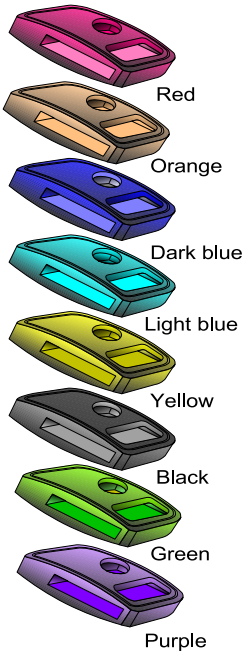


*8 colors of Keyfobs are stocked constantly for your convenience. Specify when ordering*

baton®
Security Products

# Series 4000 High Security Double-sidebar Camlocks, Plug and Cover Locks -2

## Cover Locks -

'NAMA' standard double D, hardened steel housing, that integrated with stainless steel extended screw shaft. The cylinder and extended screw shaft are secured with double retaining construction, provide extra strength against pull and punch. Can be ordered to KA, KD or MK. Lock code is restricted for your exclusive use.

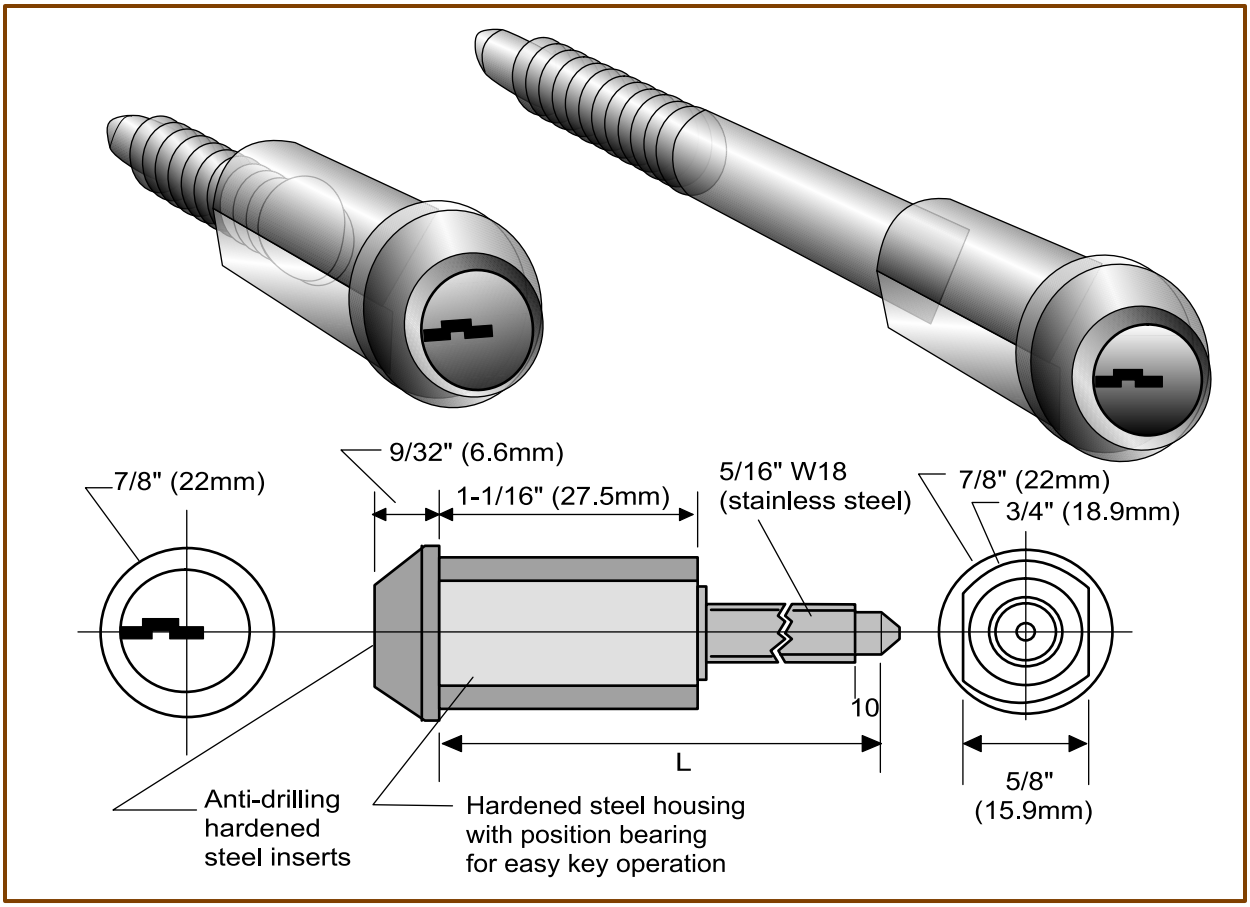


| Stock No | Description |
|---|---|
| 4044-10 | Plug lock, spring latch |
| 4044-1D | Plug lock, dead latch |
| 4086-10 | Camlock, 3/4" (19mm) |
| 4087-10 | Camlock, 15/16" (23mm) |
| 4090-10 | Camlock, 1-3/16" (30mm) |
| 4288-200 | Cover / screw lock 2" |
| 4288-241 | Cover / screw lock 2-1/4" |
| 4288-385 | Cover / screw lock 3-5/8" |
| 4288-483 | Cover / screw lock 4-3/8" |
| 4288-486 | Cover / screw lock 4-3/4" |

*Remark:*
- *Except otherwise specified, camlock is supplied with 90 degree turns, left and right with key removable at locked position only.*
- *The camlock can be rordered with 180 degree turn key removable at both locked and unlocked positions. Please call Baton's CSR for details and other special functions.*
- *Specify color of key bow when ordering..*

baton®
Security Products

# 5000 Series High Security Double-V Grooved Dimple Payphone & Vending Locks

Baton's 'Grooved Dimple' locks are made of machined brass and protected with a spinning hardened steel Guard plate to prevent lock drilling. The patented anti-picking 'Double-V' profile cylinder constructs a 9 pin tumbler protection and presents millions of different key combinations. The user-friendly reversible key is removable in the locked position only. Locks can be keyed to KA (keyed alike) or KD (keyed different).
All codes are restricted and registered for customer's exclusive use. Continuous services can be obtained from Baton's authorized services centers, distributors or factory direct.

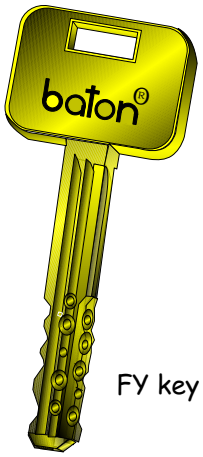

FY key



FX key

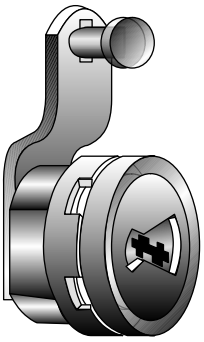

No. 5071-23
**GTE style Upper lock**
for GTE/Quadrum/Elcotel/ Protel payphones
Chrome plated brass construction, features the patented double-V anti-pick 9 pin tumbler cylinder protection.
Furnished with adjustable stud type locking cam.

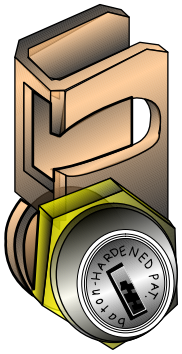

No. 5578-19
**Intellical Upper lock**
for Intellical payphones
Chrome plated brass construction, features the patented double-V anti-pick 9 pin tumbler cylinder protection.
Furnished with extra strong anti-pry double ply hock type locking cam.



5085-10 5/8"
5087-10 7/8"
5089-10 1-1/8"

Series 5080
**Camlock**, 'NAMA' standard
Chrome plated brass construction, features the patented double-V anti-pick 9 pin tumbler cylinder protection. A hardened steel cylinder guard spins to adverse the drilling of the lock open.
3 sizes are available to order.



No. 5044-10
**Plug Lock**
'NAMA' standard
Chrome plated brass construction, features the patented double-V anti-pick 9 pin tumbler cylinder protection. A hardened steel cylinder guard spins to adverse the drilling of the lock open.
Can be ordered with sprung or dead locking latch. Please specify.

Flat head Cylinder Guard
accepts FX and FY keys

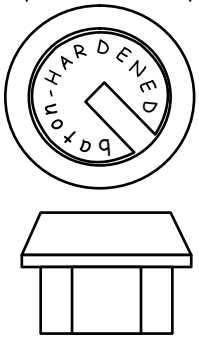

Ball head Cylinder Guard
accepts FY key only

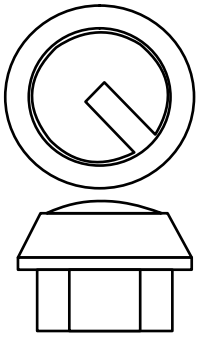

| Stock No | Description |
|---|---|
| 5044-10 | Plug lock, spring latch |
| 5044-1D | Plug lock, dead latch |
| 5071-23 | 'GTE' payphone lock, upper |
| 5078-19 | 'Intellical payphone lock, upper |
| 5085-10 | Camlock, 5/8" |
| 5087-10 | Camlock, 7/8" |
| 5089-10 | Camlock, 9/8" |

All payphone locks fit payphones without any modifications to payphone housings.
Cam and Plug locks meet 'NAMA' standard.

baton®
Security Products

# 5000 Series 'Super - 5' 5-Code changeable System

Taiwan patented No. 78,208,792

*Baton's series 5000 Payphone and Vending Locks can be programmed with a Super 5-code changeable system. The super 5 locks can be furnished with 5 keys (#1, #2,#3, #4 & #5). No change key is required to change the lock code. Lock code can be changed 4 times without uninstallation the lock.*

## Security Time Saving & Convenience !!

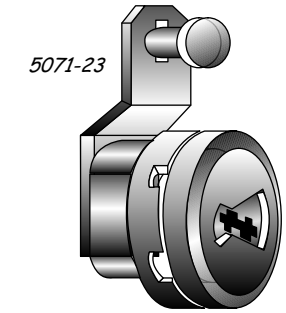
5071-23

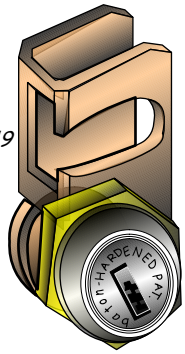
5078-19

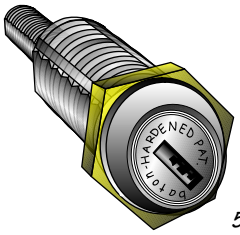
5085-10 5/8"
5087-10 7/8"
5089-10 1-1/8"

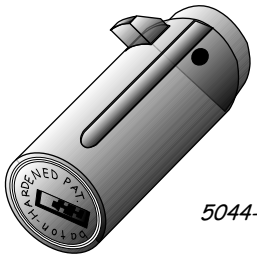
5044-10

*Example:*
*Starting with Key #1 as a normal OP key, then inserting Key #2 to operate, the lock then becomes code #2 and code #1 is eliminated. Then upon inserting Key #3 to operate, the lock becomes code #3 and code #2 is eliminated etc. through Key #5. Codes cannot be reversed. Locks then can be rekeyed to 5 new, restricted customer codes by us or any authorized service center.*

**Super 5**

*Code is changed once you insert the next key to operate the lock.*

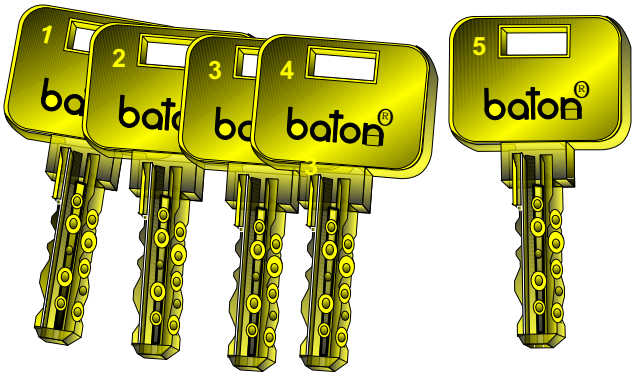

baton®
Security Products

# 6000 Series
## Detainer Disc Locking Systems

All Baton's series 6000 Payphone and Vending locks are available with a number of key profiles which provide different levels of security.
There are :

**Commercial Keyways -**
**S1, S2, S4, S6**

*These standard key profiles are supplied without restriction. Key duplication may be obtained on a locksmith level.*

**Restricted Keyways -**
S6, S7
'R' series &
'D' series (reversible)

*These special key profiles are available when special key security is required.*
*Key duplication can be obtained by special order from our factory or authorized service centers only.*

Baton series 6000 Payphone and Vending Locks are featured with the virtually pick-proof rotating detainer disc locking mechanism. More than 20 different key profiles present hundreds of millions of key combination for your different levels of security needs. locks can be KA (keyed alike), KD (keyed different) or MK (master keyed), either to your existing code or new restricted, exclusive code.




'D' series
(Reversible)

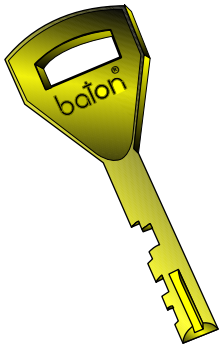


'S' series




'R' series




'R' series
(Short)

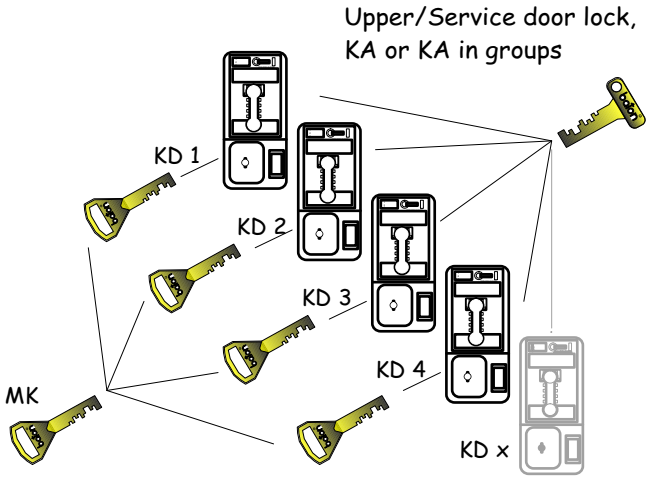


Lower/vault lock
Each phone operates by individual key and the management has one MK key to operate all phones within the same system.

baton®
Security Products

# 6000 Series Detainer Disc Payphone and Vending Locks

The components for the following locks are stocked constantly for your convenience. Our in-house well trained assembling team can normally complete your order within 3 to 5 working days.

No. 6044
**Plug Lock**
'NAMA' standard
Chrome plated hardened steel housing, features a 9~11 pick=proof detainer disc cylinder protection. Can be ordered with spring or dead locking latch. Please specify.

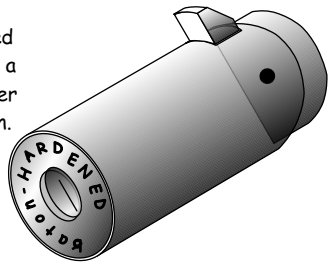


No. 6071-16
**GTE style Lower lock**
for GTE/Quadrum/Elcotel/ protel payphones
Heavy gauge steel construction with chrome plated hardened steel cylinder housing. features a 9 anti-pick detainer disc cylinder protection.
Furnished with bolting screws x 6

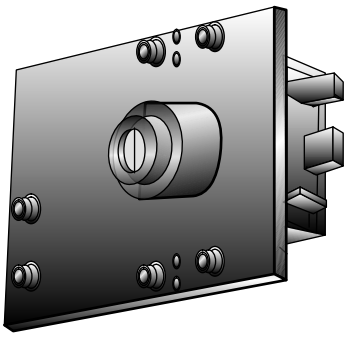

No. 6047-22
**Push lock**

Die case zinc alloy bracket constructed with brass housing, Chrome plated. features 9 anti-pick detainer disc cylinder protection

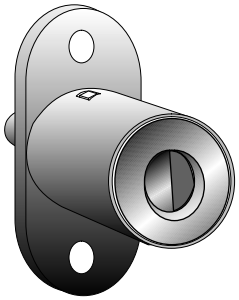

No. 6071-23
**GTE style Upper lock**
for GTE/Quadrum/Elcotel/Protel payphones
Chrome plated hardened steel housing features 9 anti-pick detainer discs protection.
Furnish with adjustable stud type cam

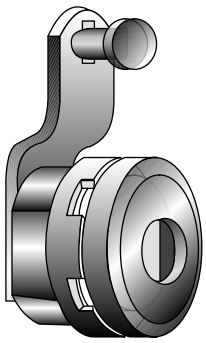

No. 6078-19
**Intellical Upper lock**
for Intellical payphones
Chrome plated hardened steel housing, features a 9 anti-pick detainer disc cylinder protection. Furnished with an extra strong anti-pry double ply hock typelocking cam.

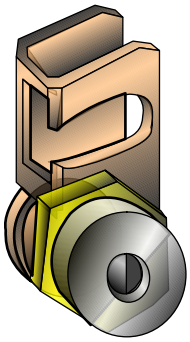

No. 6073-17
**Western style Upper/Lower lock**
for AT&T/Western Electric payphones
Heavy gauge steel construction with chrome plated hardened steel cylinder housing that features a 9 anti-pick detainer discs cylinder protection.

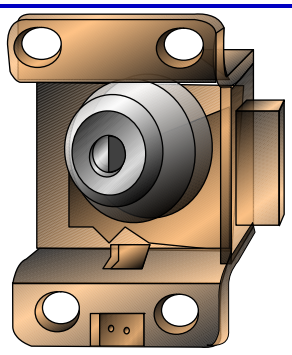

Series 6080 **Camlock**
'NAMA' standard
Model 6085 is constructed with chrome plated hardened steel housing. Models 6086. 6087 & 6089 are made of brass and chrome plated.Features a 9~11 pick-proof detainer disc cylinder protection. 3 sizes are available to order

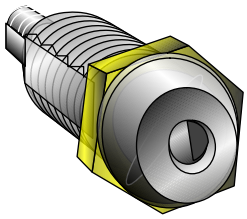

**6085-10 3/4"**
**6086-10 3/4"**
**6087-10 7/8"**
**6089-10 1-1/8"**

| Stock No. | Description |
|---|---|
| 6044-10 | Plug lock, spring latch |
| 6044-1D | Plug lock, dead latch |
| 6047-22 | Push lock |
| 6071-16 | 'GTE' payphone lock, upper |
| 6071-23 | 'GTE' payphone lock, lower |
| 6073-17 | 'W.E' payphone lock, upper/lower |
| 6078-19 | 'Intellical' pahphone lock, upper |
| 6085-10 | Camlock, hardened steel, 3/4" |
| 6086-10 | Camlock, brass, 3/4" |
| 6087-10 | Camlock, brass, 7/8" |
| 6089-10 | Camlock, brass, 9/8" |

All payphone locks fit payphones without any modifications to payphone housings.
Cam and Plug locks meet 'NAMA' standard.

baton®
Security Products

# Models 671-29, 6273-38, 6273-58
# Detainer disc Seal Lock and Puck Locks

## Model 671-29 Seal Lock Housing

The high security Seal Housing is made of hardened steel and tripple chrome plated for crossion resistance. furnished with mounting nut. 1-1/8"dia x15/16" 2-flat.

## Model 6047-10 Cylinder Plug

Tripple chrome plated hardened steel housing constructs with detainer disc locking mechanism. 'S','R' or 'D' more than 20 different key profiles, presents hundreds of millions key differs. Rekeyable.




## Models 6273-38, 6273-58 Puck Locks




Hardened, extruded solid steel one piece construction, featured with anti-pick detainer disc hardened steel cylinder protection. 'S', 'R' or 'D' more than 20 different key profiles presents 10s of millions key differs. Can be ordered to Keyed Alike, Keyed Differently and Master Keying. Rekeyable.

- Model 6273-38 and 6273-57 coustructed with a direct drive locking bolt, to use a key, 1/4 turn to lock and relock.
- Model 6273-58 and 6273-59 constructed with a sectional heavy locking bolt, can be ordered with auto latch to relock without a key or deadlocking latch to relock with a key.

| Item No | Description | Size (mm) |
|---|---|---|
| 671-10 | Seal Lock Housing with Nut | 28.5 x 32.5 |
| 6047-10 | High Security Cyl Seal Plug | 19 x 36.8 |
| 6273-38D | Puck Lock, stage bottom, Deadlocking | 73 x 38 H |
| 6273-57D | Puck Lock, stage bottom, Deadlocking | 73 x 57 H |
| 6273-58A | Puck Lock, flat bottom, Auto Latch | 73 x 57 H |
| 6273-58D | Puck Lock, flat bottom, Deadlocking | 73 x 57 H |
| 6273-59A | Puck Lock, stage bottom, Auto Latch | 73 x 57 H |
| 6273-59D | Puck Lock, stage bottom, Deadlocking | 73 x 57 H |

**Puck Lock w/stage bottom**

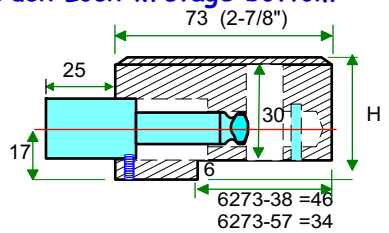


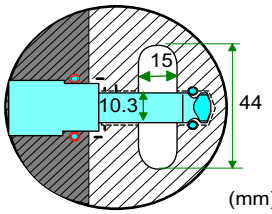


**6273-38** 73 x 38mm H
**6273-57** 73 x 57mm H

**Puck Lock**

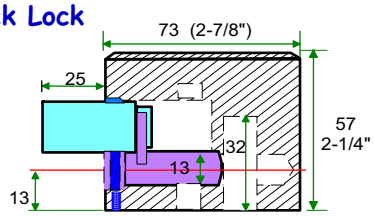


**Flat bottom-**
**6273-58A Auto Latch**
**6273-58D Deadlocking**

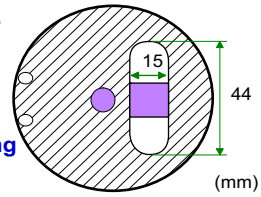


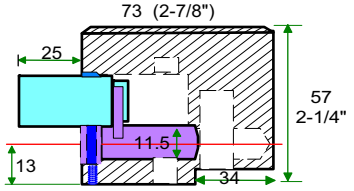


**Stage bottom -**
**6273-59A Auto Latch**
**6273-59D Deadlocking**

baton®
Security Products

# Series 8100 10-Pin Anti-Pick Plug Lock, Push Lock, Camlocks & Screw Locks

The hardened steel cylinder casing constructed in Plug Lock (8144) has an extra thick (0.22") lock front, provides extreme protection against the drilling, filing or pulling the lock open. Lock can be ordered with spring latch or dead latch. Please specify.

Model 8147 Push lock - One piece zinc alloy bracket constructs with hardened steel inner 10-pin anti-pick cylinder protection. The steel barrel features a hardened steel stud to add extra anti-drilling protection.

Model 8187 has an one piece constructed steel barrel with a hardened steel anti-drilling stud installed; features a 10 pairs of stainless steel pin tumblers protection. The cylinder has an extra hardened steel retaining ring to secure in place for added, extra strength against the attack from pull ing or punching the lock open.

Both models use bright chrome plated hardened steelhousing and featured with anti-drilling full round barrel head of both locks adverse prying and picking lock open without using an original key. 'NAMA' standard double 'D' barrel tail accepts a cam bar, extended screw or 'T' shafts. Custom length is available to order.

## *Key style to choice*

8800-B6 Long key
high speed steel

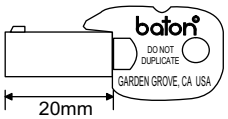


8800-B8 Long key
tooling steel *

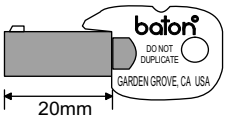


* Available to be heat treated, please specify

## *Plastic keybow (optional)*

-for better and easier key operating




Small, black




Large Green

Available KD, KA or KA in groups.
Code is restricted for client's exclusive use.
Lock can be purchased with or without Shaft.

**Pluglock**
Chrome plated zinc alloy housing constructed with hardened steel cylinder shell, features anti-pick and drill resistance 10 pin cylinder protection.

**8144-10 Spring Latch**
**8144-1D Dead Latch**

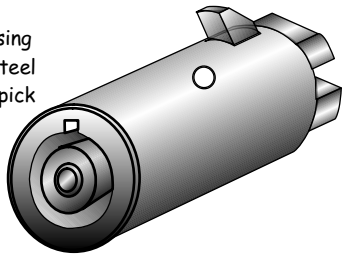

**Push Lock**
Chrome plated metal housing, features anti-pick and drill resistance 10 pin cylinder protection.
Size:
Housing: dia 22 x 32mm L
Locking stud : dia 8 x 10mm L

**8147-10**

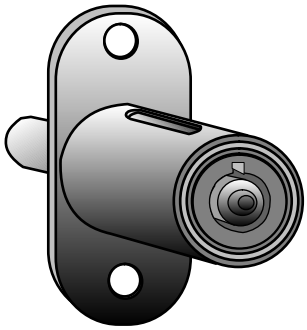

**Camlock**
Chrome plated hardened steel housing, features anti-pick and drill resistance 10 pin cylinder protection.

**8185-10 5/8"**
**8187-10 7/8"**

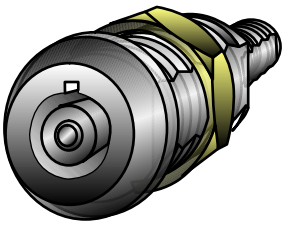

**Screw Lock with steel shaft attached.**
Chrome plated hardened steel housing, features anti-pick and drill resistance 10 pin cylinder protection.
Size: 4-1/2"

**No. 8187-484 4-4/8"**

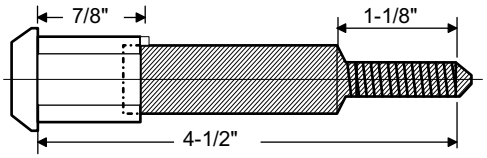


**Screw Lock with Custom length steel shaft attached**
- Custom length to meet your particular needs.
Chrome plated hardened steel housing, features anti-pick and drill resistance 10 pin cylinder protection.

**No. 8187-TX custom length**

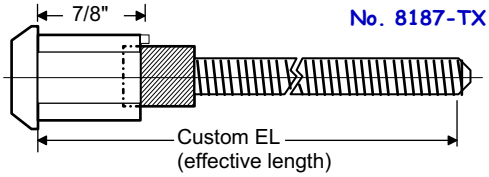

baton®
Security Products

# Models 8288 10-Pin Anti-Pick & Punch Resistant Screw Lock

## Models 8288

### Heavy Duty Screw lock

'NAMA' standard double D, hardened steel housing, features 10 pairs of stainless steel pin tumbler protection, presents tens of millions key combinations. The cylinder and screw shaft are secured with double retaining plugs and hardened steel retaining rings provide extra strength against pull and punch. The full round one piece construction solid steel barrel features a hardened steel insert adverse the drilling or picking lock open. Lock can be keyed differently and aliked in groups. Code is restricted for your exclusive use.

***Key style to choice***

8800-B6 Long key
high speed steel

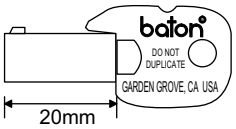


8800-B8 Long key
tooling steel *

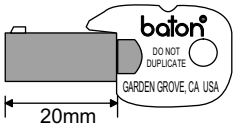


* Available to be heat treated, please specify

***Plastic keybow (optional)***

-for better and easier key operating




Small, black




Large Green

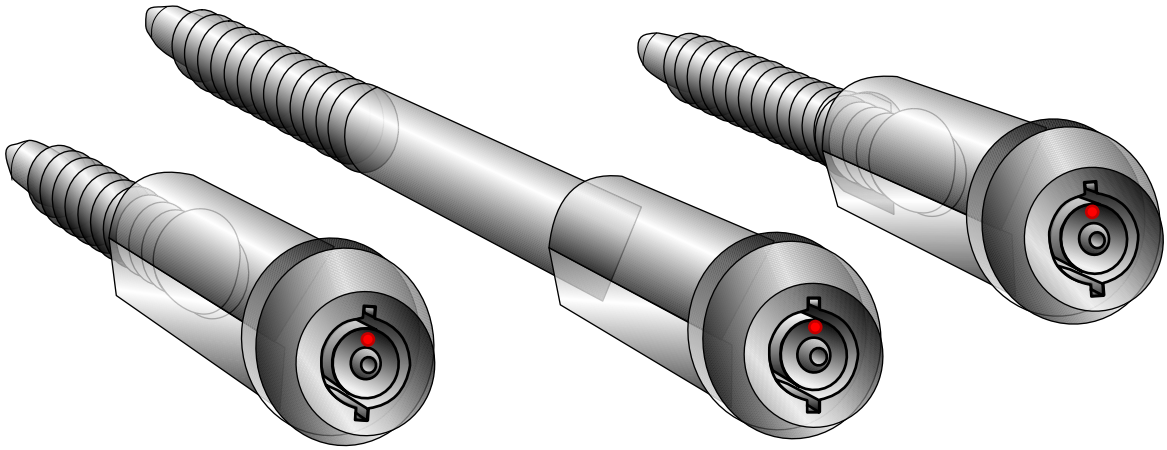

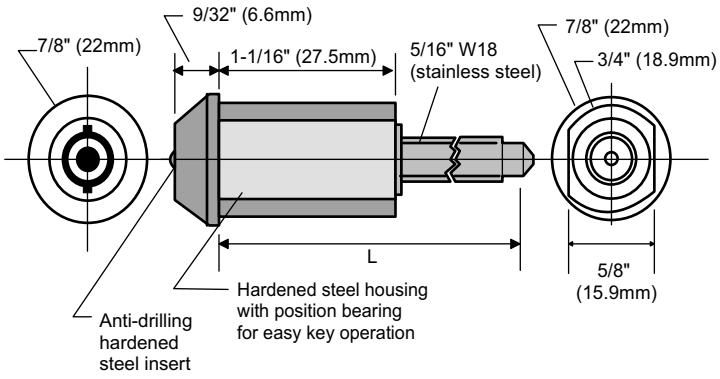


| Item No | Description /size (L) |
|---|---|
| 8288-187 | Screw lock 1-7/8" |
| 8288-200 | Screw lock 2" |
| 8288-241 | Screw lock 2-1/4" |
| 8288-381 | Screw lock 3-1/8" |
| 8288-385 | Screw lock 3-5/8" |
| 8288-486 | Screw lock 4-3/4" |

baton®
Security Products

# Models 8273-38, -57, -58 and -59
# 10-Pin Anti-Pick Puck Locks

Hardened, extruded solid steel one-piece construction, featured with 10-pin anti-pick hardened steel cylinder protection. Can be ordered Keyed Differently(KD) or Keyed Alike (KA) to the same code of the Camlocks, Plug lock and Screw locks.
Rekeyable.




Models 8273-38 and 8273-57 contructed with a direct drive locking bolt, are to use a key, 1/4 turn to lock and unlock.

Models 8273-58 and 8273-59 constructed with a sectional heavy locking bolt, can be ordered with auto latch to relock without a key or dead-locking latch to relock with a key.

| Item No | Description |
|---|---|
| 8273-38D | Puck Lock / stage. Deadlocking, relock with a key, 1-1/2" |
| 8273-57D | Puck Lock / stage. Deadlocking, relock with a key, 2-1/4" |
| 8273-58A | Puck Lock / flat. Auto latch, relock without a key, 2-1/4" |
| 8273-58D | Puck Lock / flat. Deadlocking, relock with a key, 2-1/4" |
| 8273-59A | Puck Lock / stage. Auto Latch, relock without a key, 2-1/4" |
| 8273-59D | Puck Lock / stage. Deadlocking, relock with a key, 2-1/4" |

### Puck Lock / stage bottom

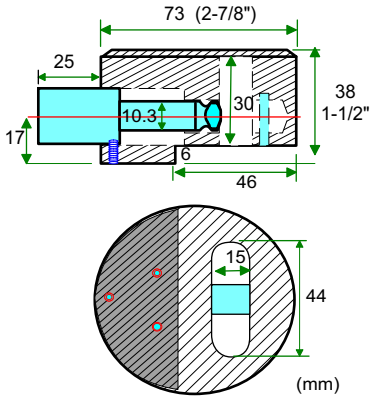


**8273-38D -** Deadlocking, relock with a key

### Puck Lock / stage bottom

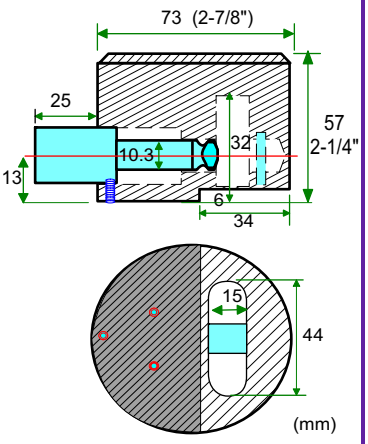


**8273-57D -** Deadlocking, relock with a key

### Puck Lock / flat bottom

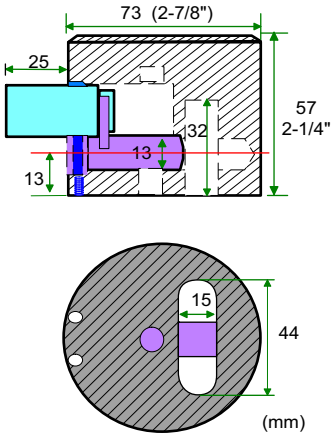


**8273-58A -** Auto latch, relock without a key
**8273-58D -** Deadlocking, relock with a key

### Puck Lock / stage bottom

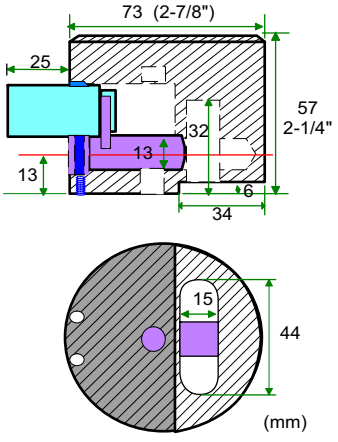


**8273-59A -** Auto latch, relock without a key
**8273-59D -** Deadlocking, relock with a key

baton®
Security Products

# 8800 Series
# 12-Code Changeable System

*USA patented No. 6,357,271*

Baton series 8800 Payphone and Vending locks are designed to coincide with numbers on a clock. Locks can be rekeyed into any one of the 12 key combinations, back and forth, regardless of sequence, using the customer's exclusive (restricted) change key without diminishing security, losing codes or removing locks. Ideal for Management key control, shift/region switchings and or routine code changes.

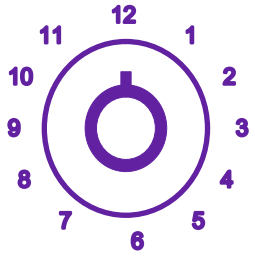


Features:

- Long lasting, chrome plated hardened steel housing and anti-torque/ picking hardened steel barrel head; constructed with 12 Stainless steel pin tumbler locking mechanism.
- Tens of billions of exclusive key codes are registered and reserved for customer's exclusive use. Continuous services can be obtained from Baton's authorized service centers, distributors, or factory direct.

12-code changeable payphone locks can be code changed in any sequence,back and forth, using customer exclusive (restricted) change key, without losing codes or removing locks. Just one key for collections and service! Tens of billions of different key codes are available.

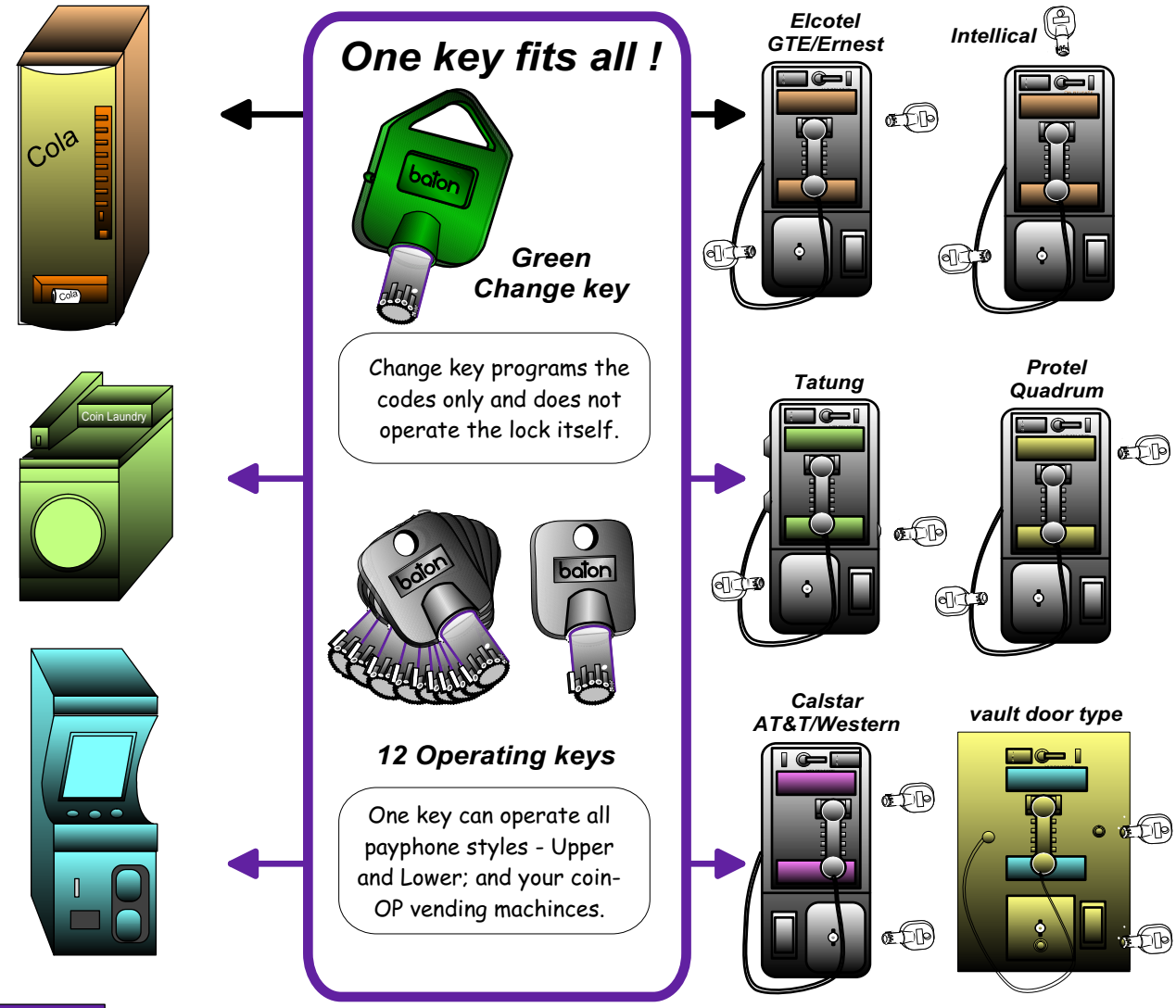

baton®
Security Products

# 8800 Series 12-Code Changeable Payphone and Vending Locks

*USA patented No. 6,357,271*

The components for the following locks are stocked constantly for your convenience. Our in-house well trained assembling team can normally complete your order within 3 to 5 working days.

No. 8844-10
**12-code Changeable Plug Lock**
'NAMA' standard
Chrome plated hardened steel housing, features anti-pick and drill resistance 12-code changeabe cylinder protection. Can be ordered with sprung or dead locking latch. Please specify.

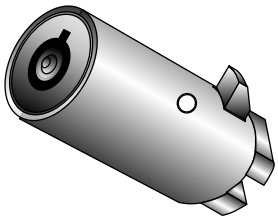

No. 8871-27
**GTE style Upper lock**
for GTE/Quadrum/Elcotel/ Protel payphones
Chrome plated hardened steel housing, features anti-pick and drill resistance 12-code changeabe cylinder protection. Furnished with adjustable stud type locking cam.

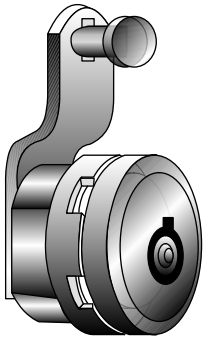

No. 8875-18
**Taytung Upper lock**
for Taytung payphones
Chrome plated hardened steel housing, features anti-pick and drill resistance 12-code changeabe cylinder protection. Furnished with angle type locking cam.

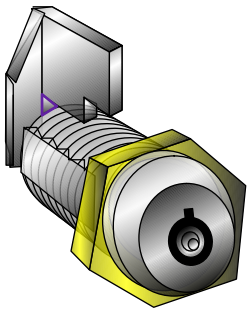

No. 8871-16
**GTE style Lower lock**
for GTE/Quadrum/Elcotel/ Protel payphones
Heavy gauge steel construction with chrome plated hardened steel cylinder housing. Anti-pick and drill resistance 12-code changeabe cylinder protection. Furnished with bolting screws x 6.

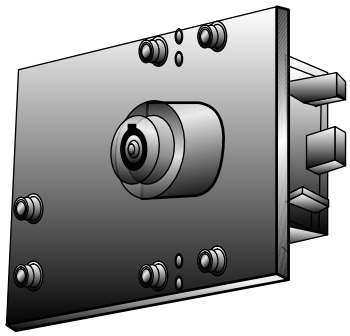

No. 8878-19
**Intellical Upper lock**
for Intellical payphones
Chrome plated hardened steel housing, features anti-pick and drill resistance 12-code changeabe cylinder protection. Furnished with extra strong anti-pry double ply hock type locking cam.

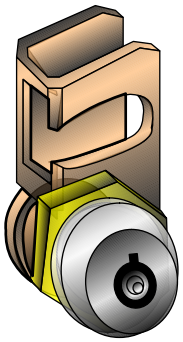

No. 8873-17
**Western style Upper/Lower lock**
for AT&T / Western Electric payphones
Heavy gauge steel construction with chrome plated hardened steel cylinder housing. Anti-pick and drill resistance 12-code changeabe cylinder protection.

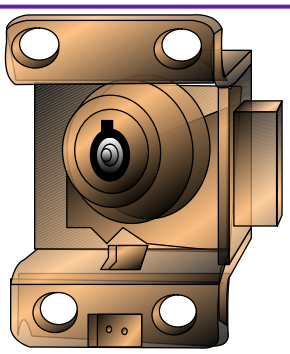

| *Stock No.* | *Description* |
|---|---|
| 8844-10 | Plug lock, spring latch |
| 8844-1D | Plug lock, dead latch |
| 8871-16 | 'GTE' payphone lock, lower |
| 8871-23 | 'GTE' payphone lock, upper |
| 8873-17 | 'W.E.' payphone lock, upper/lower |
| 8878-19 | 'Intellical payphone lock, upper |
| 8885-10 | Camlock 5/8" |
| 8887-10 | Camlock 7/8" |
| 8889-10 | Camlock 9/8" |

Series 8880
**12-code Changeable Camlock**
'NAMA' standard
Chrome plated hardened steel housing, features anti-pick and drill resistance 12-code changeabe cylinder protection. 3 sizes are available to order.
5/8", 7/8", 1-1/8"

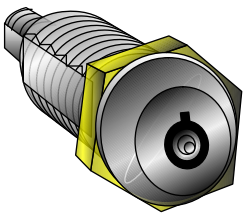

All payphone locks fit payphones without any modifications to payphone housings.
Cam and Plug locks meet 'NAMA' standard.

baton®
Security Products

# Tips for 12 code changeable locks

*- Please read carefully prior to the lock installed.*

*USA patented No. 6,357,271*

## *Designed to coincide with clock numbers -*

12 Code Changeable Payphone Locks are designed to coincide with numbers on a clock. All locks are preset at the 12 o'clock position. Simply insert the #12 ***OP Key*** *(Operating Key)* with small tab on key at 12 o'clock position. Push the key in and then turn left or right (depending on the style of payphone) to operate the lock.
*OP Key* is removable at locked position only.

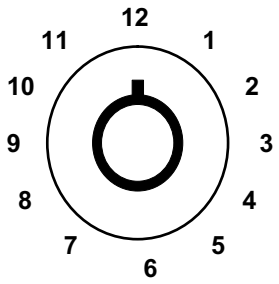


## *Changing code without removing the lock -*

Series 8800 Payphone Locks are designed for you to change the code within the system easily and quickly. For example, to change the code to #3 from the preset code/position #12, simply insert the ***Green Change Key*** with the small notch on key at 12 o'clock position. Push the key in then turn to 3 o'clock position and remove the ***Green Change Key.*** The lock is now on new code #3 and can be operated with the ***#3 OP Key*** only. If the #3 ***OP Key*** does not operate the lock, insert the ***Green Change Key*** again in the neighboring positions, 2 or 4 o'clock, to reset it to the 3 o'clock position. As you may have set to a wrong code desired.

The lock can be changed to any of the other 11 codes by inserting the ***Green Change Key*** into lock with the small notch on key at the existing code number. If, by chance, you do not know which code the lock is on, simply insert the ***Green Change Key*** starting at 12 o'clock through 11 o'clock until the key can be pushed in and turned. This will tell you which code the lock is on. ***The function of the Green Change Key is to change the code numbers in the same system only; it can not operate the lock.***

## *Q & A -*

On occasion, we receive questions on what to do when the key might be removed from the lock while in a wrong position. For example: Upper style payphone locks that have a cam (tail piece) with an adjustable roller style stud that locks into a double housing latching device, or a cam style that locks into stud or other device. This could happen when the lock cam locks into housing with an over tight fit. Remove the steel nipple from face of ***OP Key*** by filing off. Then insert the key at the point where it was removed from the lock. Generally, it is the 11 o'clock position for the left-turn to open locks (GTE upper or Tatung upper style lock) and the 1o'clock position for the right-turn to open locks (Intellical top lock). Next, turn the key and open the service door. You then turn the key back to the correct 12 o'clock position and remove the key.

Please make sure to readjust the position of the cam stud, or file the locking area of the cam without an adjustable stud, for snug but not over tight fit. Check the operation of the lock and latching device with your 'T' key for proper fit prior to locking the payphone housing. New as well as refurbished payphone housings can vary in locking tolerances. ***Do not continue using the altered key as it may fail in a proper locked position while you think the lock was in the locked position. Replace key as soon as possible.***

***Same principle applies to the lock installation for all the vending machines - make sure the Cam is installed SNUG but NOT OVER TIGHT FIT.***

baton®
Security Products

*- The Lock Company that is the business partner to assist you to grow, and maximize your profits*

# INDEX


| Pages | Contents |
|---|---|
| 2 | About us |
| 3 | Sales Policy |
| 4 | 4000 Series Double-sidebar Vending Locks -1 |
| 5 | 4000 Series Double-sidebar Vending Locks -2 |
| 6 | 5000 Series Double-V Dimple Payphone & Vending Locks |
| 7 | 5000 Series - "Super 5" 5-code Changeable System |
| 8 | 6000 series - Detainer Disc Locking Systems |
| 9 | 6000 Series - Detainer Disc sys Payphone & Vending Locks |
| 10 | 6047-10 Cylinder Plug & 6273 Detainer Disc sys Puck locks |
| 11 | 8185 8187 10-pin anti-pick Cam & Screw Locks |
| 12 | 8200 10-pin anti-pick Punch-resistant Screw Locks |
| 13 | 8273 10-pin anti-pick Puck Locks |
| 14 | 8800 Series 12-code Changeable System |
| 15 | 8800 Series 12-code Changeable Payphone & Vending Locks |
| 16 | 8800 Series Tips + Q&A |
| 17 | Index |


**CALL TOLL FREE 1-877-BATON 99**
**(228 6699)**

baton®
Security Products

*4 Systems of maximum security locking devices to meet your total security needs*

## System A - Double Sidebar System

The patented cylinder constructs a 10 detained blocks that are integrated with 2 locking sidebars, presents excellent protection against picking/bumping attempts. The user-friendly key is a combination of conventional cuts and laser cuts that provides extra protection against unauthorized key duplication.

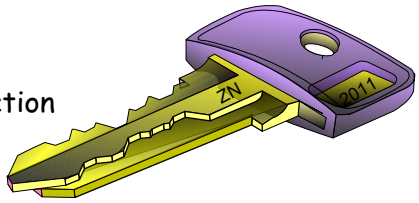


See Page 4 & Page 5

## System B - Dimple Key System, Randan key or 5 Code Changeable

Patented anti-picking 'Double-V' interlocking 9 pin tumbler cylinder protection. Millions of restricted different key codes are available. Can be programmed with a super 5 code changeable system.

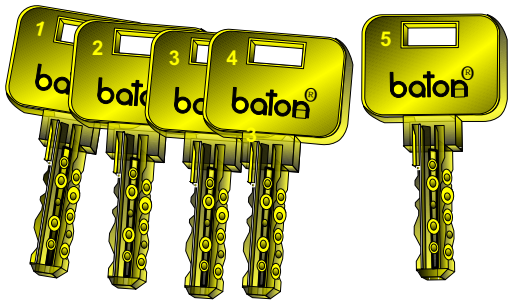


See Page 6 & Page 7

## System C - Detainer Disc Systems

More than 20 different key profiles, tens of millions of different key combinations. Can be keyed Differently/Random keyed, Keyed Alike, Master keyed in pairs or in groups. See Page 5 and Page 6 for details.

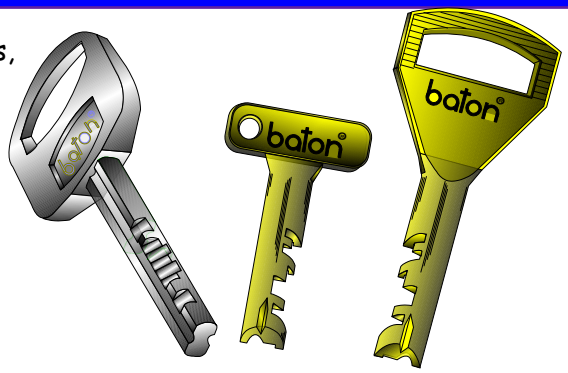


See Page 8 to Page 10

## System D - Anti-pick U-change and Random RPT Systems

12 code changeable payphone locks can be code changed in any sequence, back and forth, without losing codes or removing locks. 12 stainless steel pin tumbler cylinder protection, present up to 60,000,000,000 different key codes. See Page 7 and Page 8 for details.

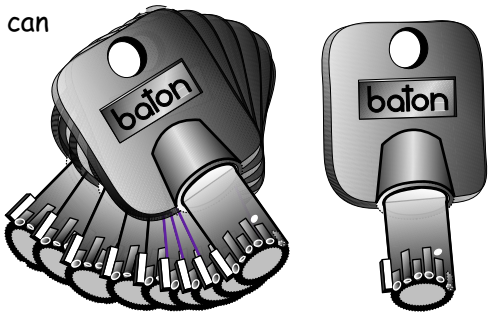


See Page 11 to Page 16

04.2013 Printed in USA